LIST OF SHELL OPENINGS

ITEM NO.	DESCRIPTION	SIZE OF OPENING	SIDE OF SHIP	FWD	AFT	FR	DIST FRM ℄ CUT TO ℄ OF SHIP	HGT TO CTR ABV KEEL	REMARKS
~~1~~	~~LODAR VERTICAL TRANSDUCER~~	~~12"x6½"~~	~~S~~		~~10"~~	~~29~~	~~6"~~		
~~2~~	~~TRANSDUCER OPENING~~	~~10⅛"~~	~~S~~			~~30~~	~~12"~~		
~~3~~	↓	↓	~~P~~		↓	~~30~~	↓		
~~4~~	↓	↓	~~S~~		↓	~~43~~	↓		
~~5~~	↓	↓	~~P~~		↓	~~43~~	↓		
6	PRIMARY BRIDGE FATHOMETER 50KHZ	2¾"	S		9"	45	12"		9½"x18½" FAIRING PROTUBES, 2½" BELOW KEEL
7	SECONDARY BRIDGE FATHOMETER 50KHZ	5¾"	P		9"	45	12"		
8	PRIMARY BRIDGE FATHOMETER 200KHZ	2¾"	S		6"	47	12"		9½"x18½" FAIRING PROTUBES, 2½" BELOW KEEL
9	SECONDARY BRIDGE FATHOMETER 200KHZ	6¾"	P		6"	47	12"		
10	TRANSDUCER SPEED LOG 2–4 MHZ	5"	S		8"	46	6"		1⅛" DIA TRANSDUCER
11	TRANSDUCER HOUSING ON SKEG	7'–3"x2'–0"	CL	——	6"	98	——		12KHZ, 24KHZ, 100KHZ ROSS TRANSDUCER
12	SAMPLING SEA CHEST	15½"	S		8"	11	2'–0"	4'–0"	
~~13~~	~~LODAR SEA CHEST~~	~~12½"~~	~~CL~~		~~10"~~	~~11~~	~~——~~		~~HULL 197 ONLY~~
14	BOW THRUSTER SEA CHEST	10"	P		10"	14		3'–6"	
15	HIGH SUCTION SEA CHEST	15½"	P/S	8"		58		5'–0"	
16	LOW SUCTION SEA CHEST	↓	P/S		18"	59	8'–10½"		
17	BALLAST SEA CHEST	↓	S		8"	67	3'–8"		
18	FIRE PUMP SEA CHEST	↓	P		10"	71	9'–6"		
19	CATHODE PROTECTION ANODE		P		10"	12		5'–6"	
20	↓		P/S	——	——	30	13'–6½"	7'–6"	
21	↓		P		10"	69	16'–0"		
22	↓		S		10"	105	16'–0¾"		
23	GARBAGE CHUTE	4"	P		8"	47	SHELL	14'–7"	
24	DBLR FOR UNDERWATER LOG	7"x3"	P		10"	56	18"		
25	STORM OIL TANK OVBD DISCH	1"	P/S		8"	0	SHELL	15'–6"	
26	BILGE DISCH	3"	P		1'0"	3	↓	14'–3"	
27	FREEZER & REFER DR. TK. OVBD DISCH	1½"	S	8"		31	↓	14'–0"	
28	↓	1"	S		8"	37	↓	14'–0½"	
29	OVERBOARD DISCHARGE	4" IPS	S		8"	46	↓	10'–7½"	
30	OVBD DISCH SALT WATER COOLING	3"	S		17"	52	↓	10'–7½"	
30A	OVBD DISCH SALT WATER COOLING	4"	P		10½"	52	↓	10'–7½"	
31	OVERBOARD DISCHARGE	4" IPS	S		10½"	53	↓	6'–6"	
32	OVBD DISCH BILGE PUMP	3"	P		10½"	53	↓	14'–3"	
33	BILGE DISCH	3"	P/S		11"	68	↓	14'–9"	
34	OVBD DISCH S.W. CLG	1½"	P/S		10½"	69	↓	10'–2"	
35	OVBD DISCH SEWAGE SYS	4"	P		10"	71	↓	9'–0"	
36	OVBD DISCH & D.O. TRANSFER SYS	3"	P		15"	76	↓	14'–6"	
36A	OVERBOARD DISCHARGE	3"	P		15"	76	↓	15'–0"	
37	OVERBOARD DISCHARGE	2" IPS	P		14"	108	↓	14'–3"	
38	DRAFT GAUGE	2"	S		10"	13	4"		
39	DRAFT GAUGE IN SKEG	2"	CL		10"	103	——		
70	DECK DRAIN VALVE & SCUPPER	3"	P/S		10"	96	SHELL	14'–3"	
71	GALLEY DRAIN OVBD	2½"	P		10"	64	↓	14'–6"	
72	GALLEY DRAIN TANK OVBD	1"	P		11"	64	↓	13'–9"	CAPPED INTERNAL INACTIVE
73	OVERBOARD DISCHARGE	1½"	P		10"	60	↓	11'–6"	
74	OVBD DISCH SALT WATER COOLING	2"	S		10"	66	↓	10'–9"	
75	BILGE DISCHARGE	3"	S		10"	62	↓	14'–9"	
76	OVERBOARD DISCHARGE	2½"	S		14"	53	↓	15'–3"	
77	OVERBOARD DISCHARGE	1½"	P/S		10"	31	↓	14'–0"	
78	DECK DRAIN VALVE & SCUPPER	3"	P/S		11"	24	↓	14'–9"	
79	OVERBOARD DISCHARGE	2"	P		10"	14	↓	13'–3"	
80	OVERBOARD DISCHARGE	2"	P		10"	25	↓	13'–6"	
81	STEAM GENERATOR BOTTOM BLOW	1½"	P		8"	52	↓	9'–6"	
82	SALT WATER SERVICE OVBD	1½"	P		14"	53	↓	10'–0"	
~~83~~	~~HYDROCHART ARRAY DOME~~	~~47"x90"~~	~~P/S~~	~~1⅛"~~		~~26~~	~~SHELL~~	~~3"~~	
~~84~~	~~ELAC MULTIBEAM ARRAY~~	~~36"x58"~~	~~P/S~~		~~6"~~	~~22~~	~~25"~~	~~8"~~	
85	EM 710 MULTIBEAM SONAR GONDOLA	5'–4"x16'–0"	CL	1"		26	——	8"	24" HEIGHT BELOW THE KEEL
86	THERMAL SALINITY GRAPH (TSG)	1"	P/S		18"	10	6'–5"	15'–2"	
87	BOW THRUSTER DIESEL EXHAUST	6"	P		8"	19	SHELL	21'–7"	
88	REFRIGERANT R134 RELIEF OVBD DISCH 1 & 2 A/C	1"	P		17"	44	SHELL	16'–0"	
89	DISTILLING PLANT SW DISCH STBD	2½"	S	8"		62	SHELL	15'–1"	
90	DECK DRAIN	3"	P/S		6"	116	11'–3"	13'–9"	DRAIN FROM MAIN DECK
91	DECK DRAIN – INACTIVE	1½"	P		15"	88	SHELL	–	BLANKED 4 BOLT FLANGE INTERNAL
92	DISTILLING PLANT SW DISCH PORT	2½"	P		6"	65	SHELL	14'–5"	

NO 1 DOCKING POSITION – AFTER SIDE OF BLOCK FROM AFT REF PT

SIDE	BLK NO	FWD OF AFT REF (FT)	POINT A HB	POINT A HT	POINT B HB	POINT B HT	BEVEL IN 14" FOR C
P/S	1	66	6–0–0	3–6–2	8–0–0	4–1–0	0–2–4
P/S	2	78	11–0–0	2–9–5	13–0–0	3–4–4+	0–2–1+
P/S	3	90	11–0–0	1–2–1	13–0–0	1–6–5	0–1–6
P/S	4	102	6–0–0	0–3–0	8–0–0	0–4–1+	0–0–0
P/S	5	114	6–0–0	0–3–0	8–0–0	0–4–1+	0–0–0
P/S	6	126	6–0–0	0–3–0	8–0–0	0–4–1+	0–0–0
P/S	7	138	6–0–0	0–3–2	8–0–0	0–4–1+	<0–0–2+>
P/S	8	150	6–0–0	0–8–1+	8–0–0	0–11–3	<0–1–0>

NO 2 DOCKING POSITION – AFTER SIDE OF BLOCK FROM AFT REF PT

SIDE	BLK NO	FWD OF AFT REF (FT)	POINT A HB	POINT A HT	POINT B HB	POINT B HT	BEVEL IN 14" FOR C
P/S	1	64	6–0–0	3–2–1+	8–0–0	3–8–6	0–2–3+
P/S	2	76	11–0–0	2–5–6+	13–0–0	3–0–6	0–2–3
P/S	3	88	11–0–0	0–11–5+	13–0–0	1–3–5	0–1–4+
P/S	4	100	6–0–0	0–3–0	8–0–0	0–4–1+	0–0–0
P/S	5	112	6–0–0	0–3–0	8–0–0	0–4–1+	0–0–0
P/S	6	124	6–0–0	0–3–0	8–0–0	0–4–1+	0–0–0
P/S	7	136	6–0–0	0–3–4+	8–0–0	0–5–5	<0–0–3+>
P/S	8	148	6–0–0	0–7–7+	8–0–0	1–1–1+	<0–1–0+>

BEARING ON BLOCKS

SUPPORT	POSITION #1	POSITION #2	POSITION #3
KEEL BLOCKS (14"x24" BEARING)	13,440 SQ IN (40 BLOCKS)	13,104 SQ IN (39 BLOCKS)	12,432 SQ IN (37 BLOCKS)
BILGE BLOCKS (14"x24" BEARING)	5376 SQ IN (16 BLOCKS)	5376 SQ IN (16 BLOCKS)	5376 SQ IN (16 BLOCKS)
TOTALS	18,816 SQ IN	18,480 SQ IN	17,808 SQ IN
BEARING PER SQUARE INCH BLOCKING	193.7#	197.2#	204.7#
BEARING PER SQUARE FOOT BLOCKING	12.45 LT	12.68 LT	13.16 LT
TONS DISPLACEMENT AT 13'–0" DRAFT=1627 TONS			

NO 3 DOCKING POSITION – AFTER SIDE OF BLOCK FROM AFT REF PT

SIDE	BLK NO	FWD OF AFT REF (FT)	POINT A HB	POINT A HT	POINT B HB	POINT B HT	BEVEL IN 14" FOR C
P/S	1	68	6–0–0	3–10–4	8–0–0	4–5–2+	0–2–4
P/S	2	80	11–0–0	3–1–4+	13–0–0	3–9–4	0–2–7+
P/S	3	92	11–0–0	1–4–6	13–0–0	1–10–0	0–1–7+
P/S	4	104	6–0–0	0–3–0+	8–0–0	0–4–3	0–0–1
P/S	5	116	6–0–0	0–3–0	8–0–0	0–4–1+	0–0–0
P/S	6	128	6–0–0	0–3–0	8–0–0	0–4–1+	0–0–0
P/S	7	140	6–0–0	0–3–0+	8–0–0	0–4–4+	<0–0–1+>
P/S	8	152	6–0–0	0–6–2+	8–0–0	0–9–7	<0–0–7>

1. LONGITUDINAL LOCATIONS ARE GIVEN FROM AFT REFERENCE POINT.
2. HEIGHTS ARE GIVEN FROM BASELINE (MOLDED).
3. LONGITUDINAL LOCATIONS AND HEIGHTS OF BILGE BLOCKS ARE GIVEN TO AFT SIDE OF BLOCKS.
4. DIMENSIONS IN FEET–INCHES–EIGHTHS. "+" INDICATES AN ADDITIONAL SIXTEENTH. "< >" INDICATES NEGATIVE.

BLEEDER PLUG LOC

ITEM NO.	INCHES AFT	OF FRAME	DIM OFF CL	PORT OR STBD
40	14	19	0'–7"	S
~~41~~	~~14~~	~~28~~	~~0'–7"~~	~~P~~
42	14	42	0'–8"	S
43	14	42	0'–8"	P
44	14	51	0'–7"	S
45	14	51	0'–7"	P
46	7	52	7'–5"	S
47	8	52	0'–7"	P
48	8	52	7'–5"	P
49	7	67	5'–1"	S
50	7	67	5'–1"	P
51	14	69	0'–7"	S
52	7	70	0'–7"	S
53	7	70	0'–7"	P
54	7	72	12'–7"	S
55	7	72	12'–7"	P
56	7	76	1'–6"	S
57	7	76	1'–6"	P
58	7	79	7'–7"	S
59	7	79	7'–7"	P
60	7	88	7'–7"	S
61	7	88	1'–6"	S
62	7	88	1'–6"	P
63	7	88	7'–7"	P
64	7	97	1'–6"	S
65	7	97	1'–6"	P
66	7	107	1'–6"	P
67	20	113	ON CL RUDDER	S
68	20	113	ON CL RUDDER	P
69	18	9	CL	—

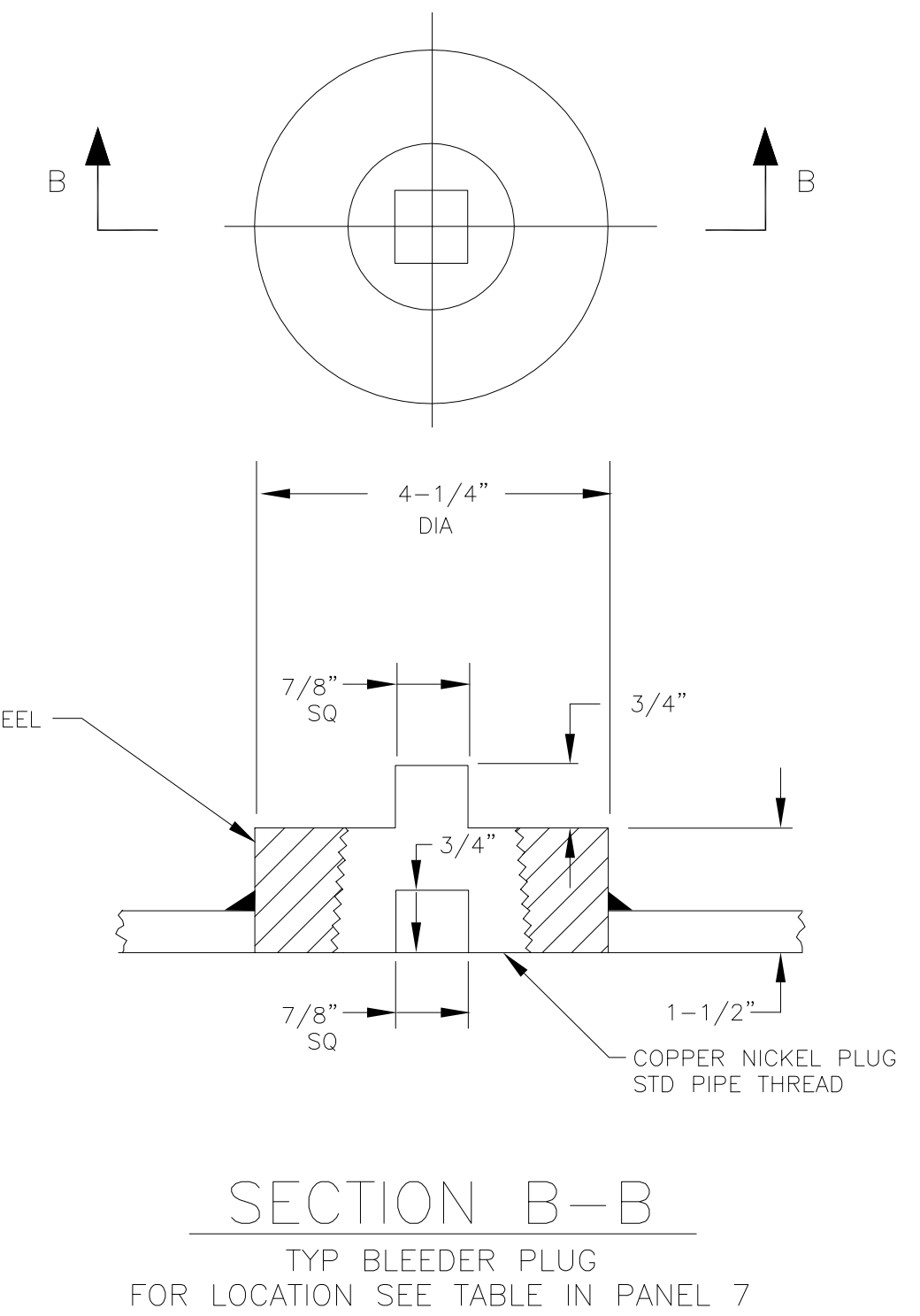
B
B
4–1/4" DIA
7/8" SQ
3/4"
MILD STEEL
3/4"
7/8" SQ
1–1/2"
COPPER NICKEL PLUG STD PIPE THREAD

SECTION B–B

TYP BLEEDER PLUG
FOR LOCATION SEE TABLE IN PANEL 7
SCALE" 6"=1'–0"

GENERAL NOTES

1. THIS DWG HAS BEEN DEVELOPED FROM NOAA DWG FA–S0701–1, ALT 3. ALL INFORMATION FROM DWG FA–S0701–1 AND ALTERATIONS THERETO HAVE BEEN INCORPORATED INTO THIS DWG. IN ADDITION, HULL PENETRATIONS, TRANSDUCER LOCATIONS, AND OTHER UNDERWATER BODY FEATURES WERE VERIFIED, JAN 1990, BY SHIPCHECK OF THE NOAA SHIP RAINIER.
2. KEEL BLOCKS SHOWN ON PLAN ARE 14" x 24" x 4'–0" LONGITUDINALLY SPACED ON 3'–0" CENTERS.
3. BLOCK ARRANGEMENT SHOWN IS FOR THE INITIAL DOCKING. (DOCKING POSITION NO1)
4. IN ORDER TO CLEAN AND PAINT THE ENTIRE BOTTOM OF THE VESSEL IN THREE SUCCESSIVE DOCKINGS, THREE DOCKING POSITIONS ARE GIVEN ON PLAN. DIMENSIONS SHOWN ARE FROM AFT REFERENCE POINT TO THE AFT SIDE OF THE AFTERMOST KEEL BLOCK. BLOCKS TO BE OMITTED ARE NUMBERED ON THE PROFILE VIEW AS FALLOWS:

   OMIT KEEL BLOCKS MARKED ⟨1⟩ FOR DOCKING POSITION NO1
   OMIT KEEL BLOCKS MARKED ⟨2⟩ FOR DOCKING POSITION NO2
   OMIT KEEL BLOCKS MARKED ⟨3⟩ FOR DOCKING POSITION NO3

5. BILGE BLOCKS ARE SPACED ON 12'–0" CENTERS AND ARE LOCATED FOR THREE DOCKING POSITIONS AS SHOWN ON PLAN VIEW AND TABLE OF OFFSETS FOR SIDE BLOCKS. BILGE BLOCK HEIGHTS WERE DETERMINED FROM ORIGINAL CONSTRUCTION MOLD LOFT OFFSETS BOOKLET REFERENCE 17.

HTS.–BILGE KEEL

FRAME	HEIGHT ABL
44	4'–1¼"
48	2'–2¼"
52	1'–9¾"
56	1'–8"
60	1'–8"
64	1'–10"
68	2'–3½"
72	4'–0½"

TABLE OF PAINTED SURFACES

SHELL BELOW BOOT TOPPING (INCL. RUDDER)	8576 SQ FT
BOOT TOPPING	2056 SQ FT
SHELL ABOVE BOOT TOPPING & BULWARK	7130 SQ FT

REFERENCES

REF NO	DWG NO	TITLE
1	S22–1–1K	RUDDERS & RUDDER STOCKS
2	S19–5–1K	CATHODIC PROTECTION SYSTEM
3	S11–8–1K	STRUTS & FAIRWATERS
4	S43–2–1K	ARRGT & DETS STERN TUBE, STUFFING BOX & BEARINGS
5	S48–1–3	DOCKING & BLEEDER PLUGS
6	S11–3–3K	FRAMING–BOW THRUSTER, LODAR RM & 8'–0" FLAT
7	S51–3–1L	DRAFT GAUGES–ARRGT & PIPING
8	S48–24–1	SEA CHESTS
9	S36–1–24K	GARBAGE RM & CHUTE
10	S48–5–1K	S.W. COOLING SYS MN ENGINES AND REDUCTION GEAR
11	S48–1–4L	BALLAST & D.O. TRANSFER SYS
12	S48–3–2L	ARRANGEMENT–FIREMAIN SYS
13	S11–13–4L	FOUNDATIONS FOR EQUIPMENT IN SOUND RMS NO. 1 & 2
14	S48–1–1	DIAGRAM OF BILGE SYSTEM
15	S48–7–3K	SEWAGE DISPOSAL SYSTEM
16	RA–461–001	EM710 MULTIBEAM SONAR GONDOLA
17	FA–S0501–1	MOLD LOFT OFFSETS BOOKLET

PRINCIPAL DIMENSIONS

LENGTH OVERALL	230'–9⅜"
LENGTH BETWEEN PERPENDICULARS	198'–9"
BREADTH MOLDED	42'–0"
DEPTH MOLDED(MN DK AT FR 71)	20'–0"
FRAME SPACING	21"

REVISIONS

REV	ZONE	ITEM	DESCRIPTION	BY	DATE	APPD
A	ALL	1	GENERAL UPDATE TO INCORPORATE FEATURES FOUND DURING SHIPCHECK OF NOAA SHIP RAINIER ON DOCK 10 JAN 1990	ART ANDERSON ASSOCIATES PER TAR NC2–014.1(89)	MAY 1990	
	4H	2	MODIFIED VERIFICATION DATE IN NOTE 1			
	10C	3	MODIFIED TABLE OF PAINTED SURFACES TO SUIT PARABOLIC TOP OF BOOT TOPPING			
	13D, 13E, VAR	4	ADDED ITEM NO'S 30A, 36A AND 70 THRU 82 TO LIST OF SHELL OPENINGS LOCATED THESE ITEMS ON PROFILE VIEW AND PLAN VIEW AS APPROPRIATE			
	13H, 13G, 13F	5	CORRECTED ITEM NO'S 1, 10, 14, 23 – 28, 30, 31 – 33 TO SUIT SHIPCHECK FINDINGS			
B	6D 6B	1	ADDED EXISTING KNUCKLE IN SKEG DELETED KEEL BLOCK IN WAY OF KNUCKLE	RAYMOND HERMES	NOVEMBER 26, 1997	
	4D 4B	2	ADDED NEW HYDROCHART ARRAY AND ARRAY DEFLECTOR GUARD, P/S DELETED KEEL BLOCKS IN WAY OF NEW HYDROCHART ARRAYS			
	13D	3	ADDED ITEM NO. 83 TO LIST OF SHELL OPENINGS			
	10A	4	MODIFIED THE BEARING ON BLOCKS TABLE TO REFLECT THE REDUCTION IN NUMBER OF KEEL BLOCKS			
C	4D 4B	1	DELETED HYDROCHART ARRAY AND ARRAY DEFLECTOR GUARD, P/S	RAYMOND HERMES	MAY 5, 1999	
	13D	2	DELETED ITEM NO. 83 FROM LIST OF SHELL OPENINGS			
	13D	3	ADDED ITEM NO. 84 TO LIST OF SHELL OPENINGS			
	4D 4B	4	ADDED NEW ELAC MULTIBEAM ARRAY AND ARRAY DEFLECTOR GUARD, P/S			
	4D 4B	5	MODIFIED ARRANGEMENT OF KEEL BLOCKS			
	10A	6	MODIFIED THE BEARING ON BLOCKS TABLE TO REFLECT THE CHANGE IN NUMBER OF KEEL BLOCKS			
D			DRAWING REVISED TO CONFINE APPLICABILITY TO NOAA SHIP RAINIER ONLY	RAYMOND HERMES	MARCH 26, 2002	
	1A	1	MODIFIED DRAWING NUMBER AND TITLE			
E	ALL	1	REVISED TO INCORPORATE CONDITIONS FOUND DURING SHIPCHECK OF NOAA SHIP RAINIER WHILE IN DRYDOCK AT VIGOR MARINE, PORTLAND OR, 24 AUGUST 2010. DELETED ITEMS 1, 2, 3, 4, 5, 13, 41, AND 84. ADDED ITEMS 86, 87, 88, 89, 90, 91, AND 92. REVISED LOCATION/SIZE/TITLE OF ITEMS 6, 7, 8, 9, 10, 20, 21, 22, 23, AND 24.	ART ANDERSON ASSOCIATES TAR AB113M–05–CQ–1044 T0055	DECEMBER 15, 2010	
	4D	2	ADDED NEW ITEM NO 85 EM710 MULTIBEAM SONAR GONDOLA, REFERENCE 16, DELETED FIVE KEEL BLOCKS, FR 28–35. ADDED TWO KEEL BLOCKS, FR21 AND FR23.			
	10D–H 9D–H 8D–H 5G	3	ADDED TABLE OF OFFSETS FOR SIDE BLOCKS FOR NUMBER 1, 2, AND 3 DOCKING POSITIONS. ADDED REF 17 AND GENERAL NOTE 5.			
	5H 5G 3C 4C 5C 8D 10F	4	REVISED GENERAL NOTE 2 TO CORRECT KEEL BLOCK TRANSVERSE DIMENSION TO 24". REVISED GENERAL NOTE 4 AND PROFILE VIEW NOTES TO CLARIFY KEEL BLOCKS THAT ARE TO BE DOUBLED FOR DIFFERENT DOCKING POSITIONS. REVISED DIMENSIONS FROM STERN REFERENCE POINT TO AFT KEEL BLOCK, TO AFT MOST END OF BLOCK VICE CENTER FOR EACH DOCKING POSITION. REVISED BEARING ON BLOCKS TABLE FOR REMOVED/ADDED KEEL BLOCKS.			

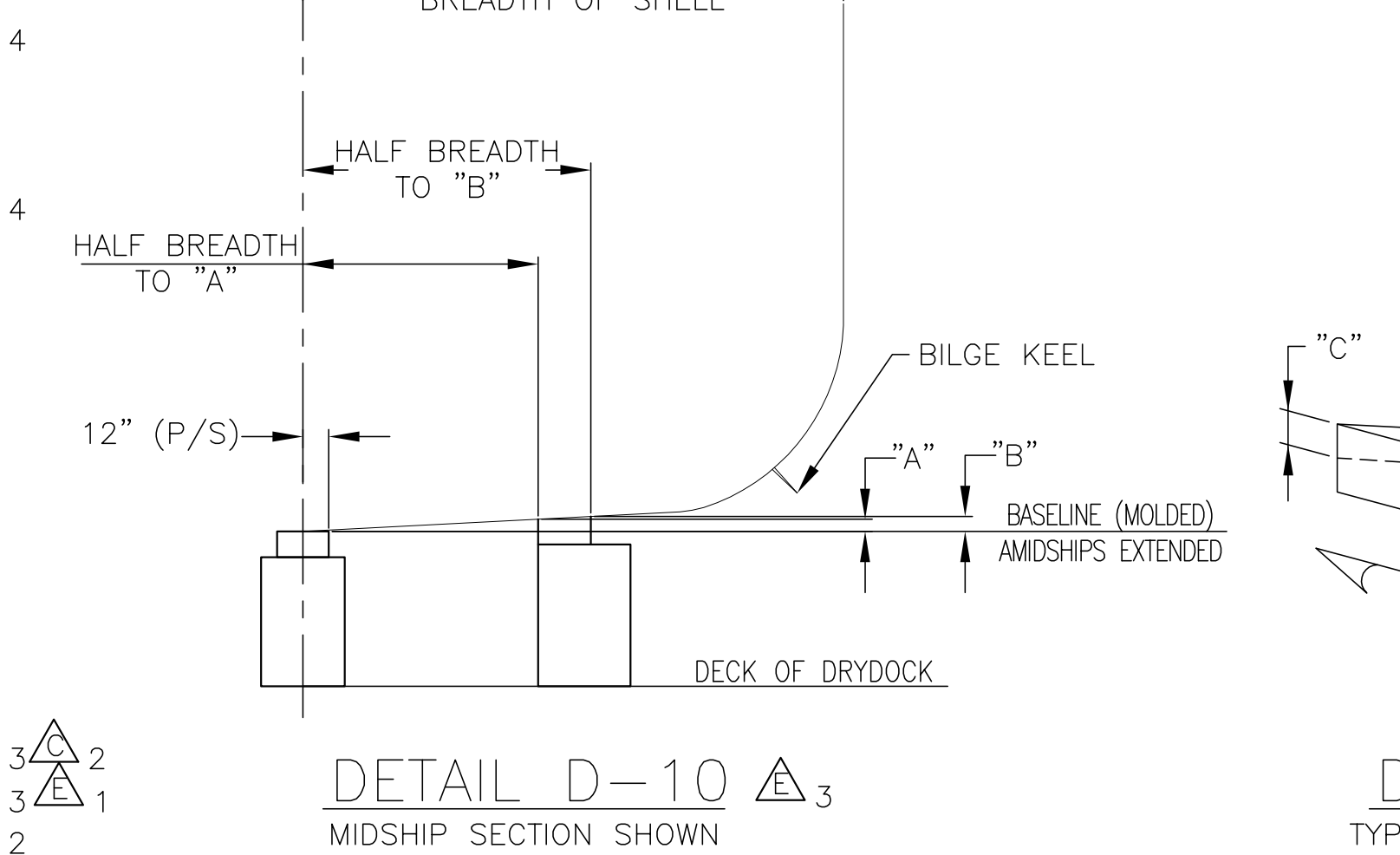
SHIP ℄
21'–0" MAX HALF BREADTH OF SHELL
HALF BREADTH TO "B"
HALF BREADTH TO "A"
12" (P/S)
BILGE KEEL
"A"
"B"
BASELINE (MOLDED) AMIDSHIPS EXTENDED
DECK OF DRYDOCK

DETAIL D–10

MIDSHIP SECTION SHOWN
TYPICAL DETAILS OF DOCKING BLOCKS
SCALE: NONE

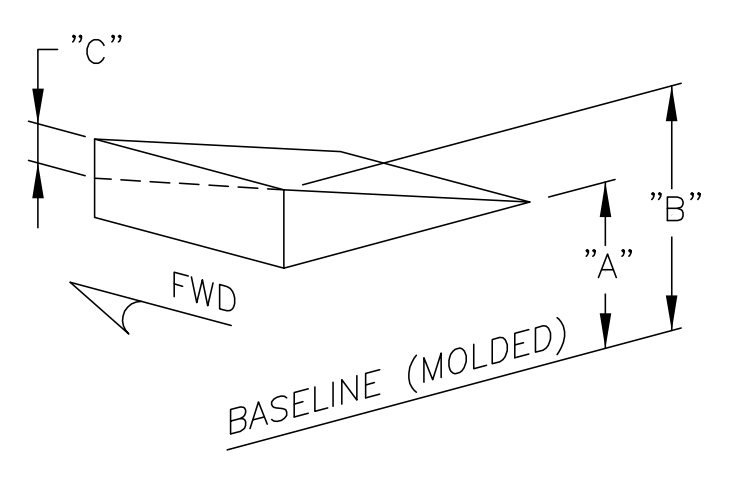
"C"
"B"
"A"
FWD
BASELINE (MOLDED)

DETAIL D–9

TYPICAL BEVELED BLOCKS
STBD BLOCK (PORT SIMILAR)
SCALE: NONE

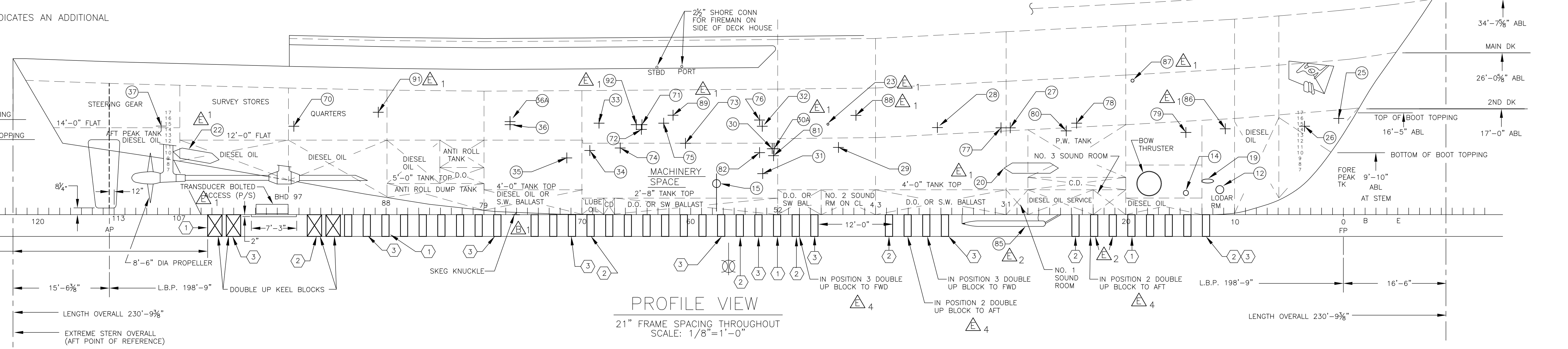
SUPERSTRUCTURE DECK
34'–7⅝" ABL
MAIN DK
26'–0⅝" ABL
2ND DK
17'–0" ABL
MAIN DECK
21'–8" ABL
TOP OF BOOT TOPPING
BOTTOM OF BOOT TOPPING
STEERING GEAR
SURVEY STORES
QUARTERS
DIESEL OIL
MACHINERY SPACE
ANTI ROLL DUMP TANK
P.W. TANK
BOW THRUSTER
NO. 3 SOUND ROOM
C.D.
LODAR RM
DIESEL OIL SERVICE
SKEG KNUCKLE
8'–6" DIA PROPELLER
DOUBLE UP KEEL BLOCKS
IN POSITION 3 DOUBLE UP BLOCK TO FWD
IN POSITION 2 DOUBLE UP BLOCK TO AFT
IN POSITION 2 DOUBLE UP BLOCK TO AFT
NO. 1 SOUND ROOM
L.B.P. 198'–9"
LENGTH OVERALL 230'–9⅜"
2½" SHORE CONN FOR FIREMAIN ON SIDE OF DECK HOUSE
31'–4" DOCKING POSITION #1
29'–4" DOCKING POSITION #2
33'–4" DOCKING POSITION #3

PROFILE VIEW

21" FRAME SPACING THROUGHOUT
SCALE: 1/8"=1'–0"

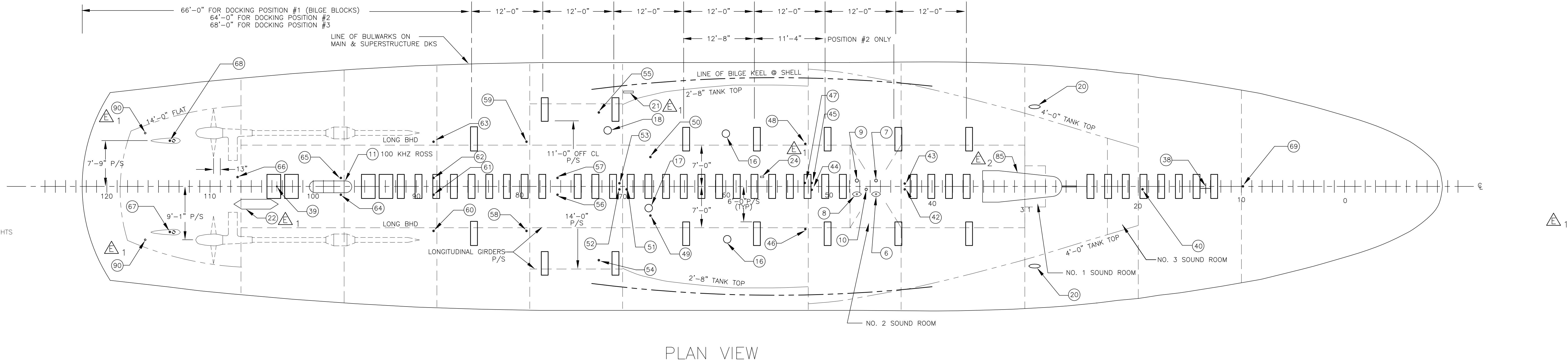
LENGTH OVERALL 230'–9⅜"
EXTREME STERN OVERALL (AFT POINT OF REFERENCE)
66'–0" FOR DOCKING POSITION #1 (BILGE BLOCKS)
64'–0" FOR DOCKING POSITION #2
68'–0" FOR DOCKING POSITION #3
LINE OF BULWARKS ON MAIN & SUPERSTRUCTURE DKS
12'–0"
POSITION #2 ONLY
LINE OF BILGE KEEL @ SHELL
LONG BHD
LONGITUDINAL GIRDERS P/S
2'–8" TANK TOP
NO. 1 SOUND ROOM
NO. 2 SOUND ROOM
NO. 3 SOUND ROOM
℄

PLAN VIEW

SCALE: 1/8"=1'–0"

NOTE: FOR BLEEDER PLUGS SEE SECTION B–B

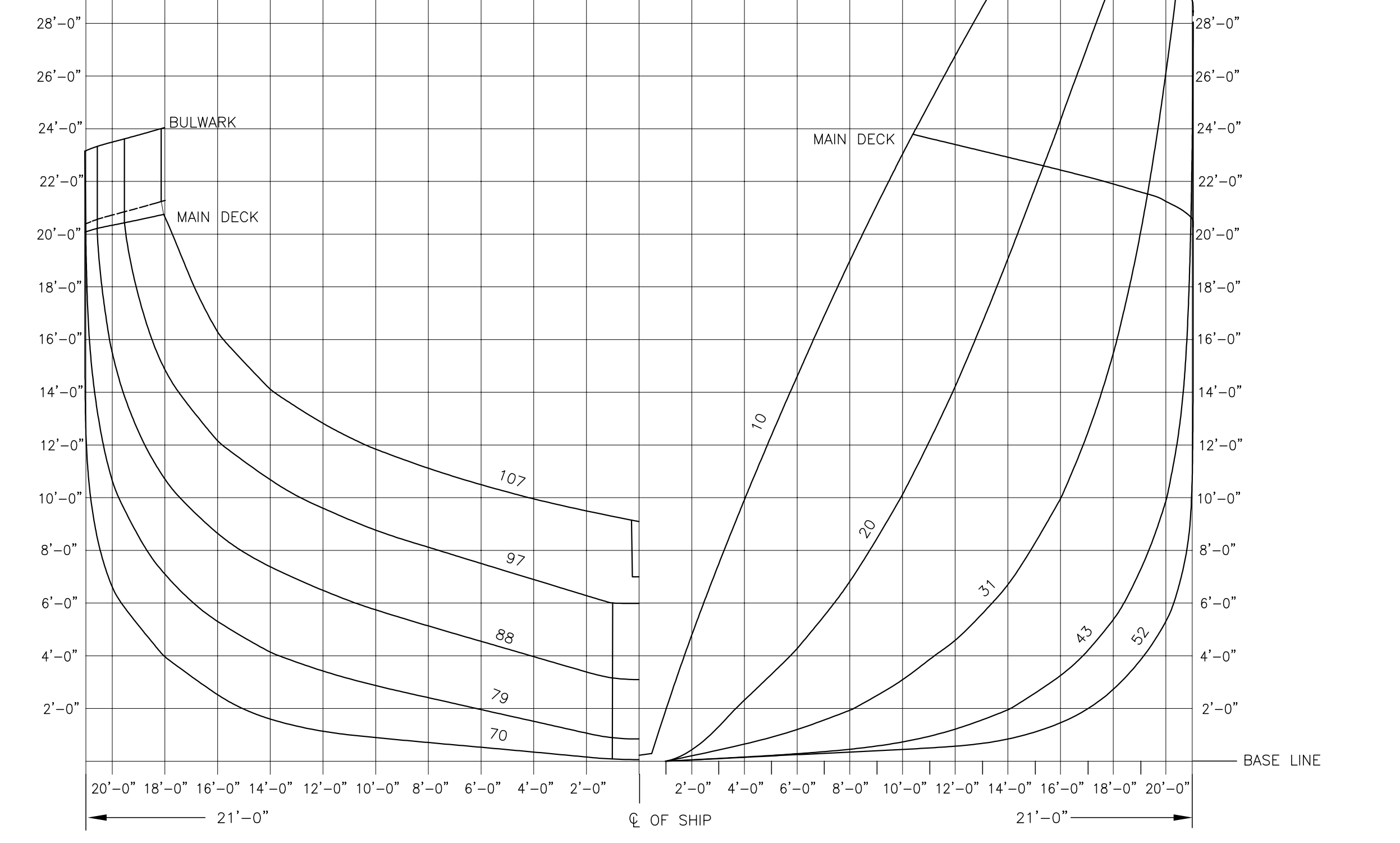
SUPER DECK
BULWARK
MAIN DECK
MAIN DECK
30'–0"
28'–0"
26'–0"
24'–0"
22'–0"
20'–0"
18'–0"
16'–0"
14'–0"
12'–0"
10'–0"
8'–0"
6'–0"
4'–0"
2'–0"
BASE LINE
℄ OF SHIP
21'–0"

BODY PLAN

FRS 10,20,31,43,52,70,79,88,97 & 107
SCALE: 1/4"=1'–0"

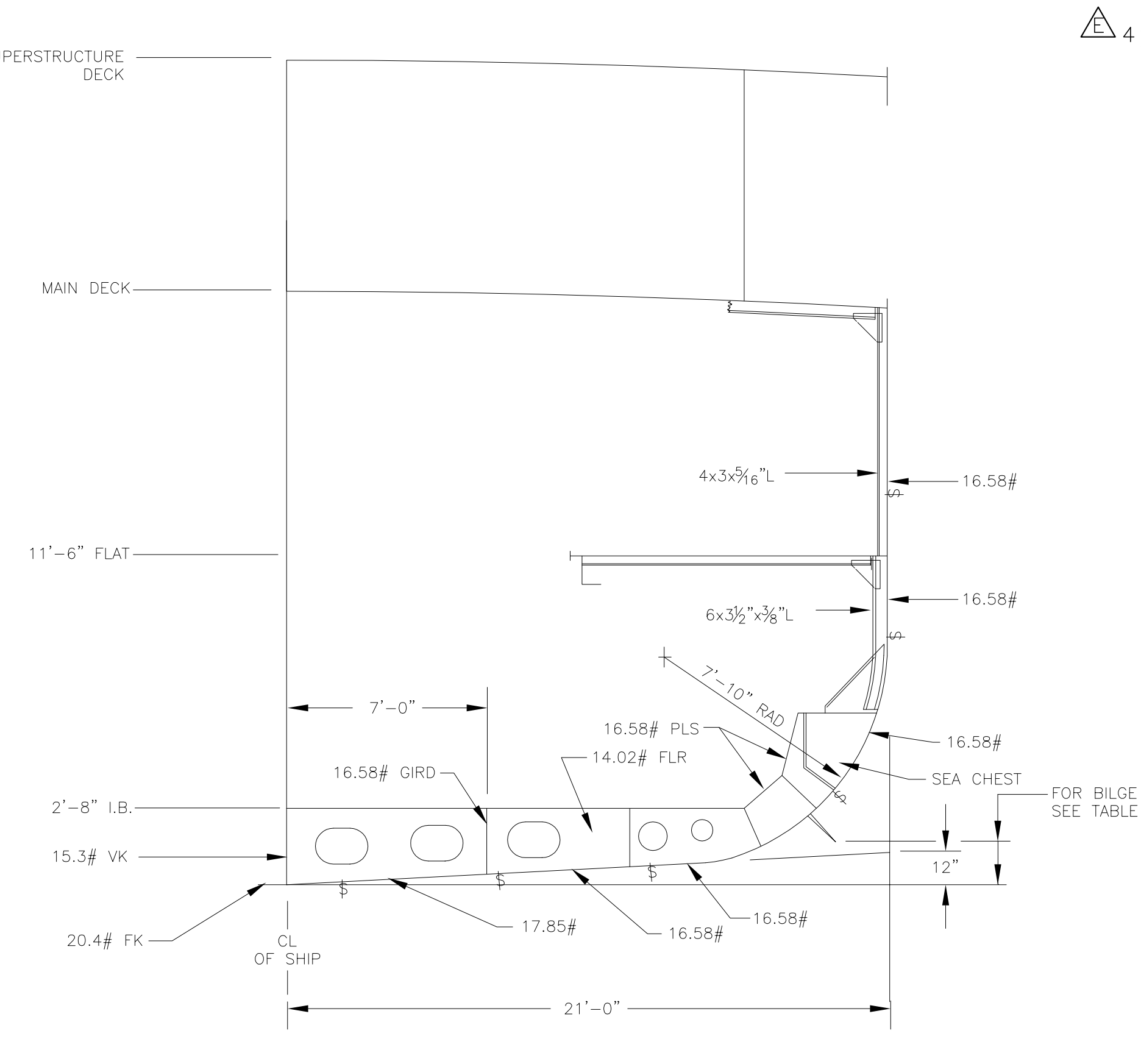
SUPERSTRUCTURE DECK
MAIN DECK
11'–0" FLAT
16.58#
SEA CHEST
FOR BILGE KEEL HEIGHTS SEE TABLE
CL OF SHIP
21'–0"

MIDSHIP SECTION

STRUCTURAL AT FR 57 SHOWN
PORT LKG AFT
SCALE: 1/4"=1'–0"

MA HULL NO.	YARD HULL NO.	SHIP'S NAME	BUILDING YARD
198	645	RAINIER	AEROJET–GENERAL SHIPYARDS, INC.
~~197~~	~~644~~	~~FAIRWEATHER~~	~~AEROJET–GENERAL SHIPYARDS, INC.~~

ART ANDERSON ASSOCIATES
148 FIRST STREET BREMERTON, WA 98310
(206) 479–5600 FAX 479–5605
65 MARION STREET SEATTLE, WA 98104
(206) 622–6221

NATIONAL OCEAN SERVICE
PACIFIC MARINE CENTER (NOAA)
1801 FAIRVIEW AVE. E.
SEATTLE, WA 98102

APPROVALS	DATE
CHIEF ENG BILL CAMPBELL /S/	10/30/87
PROJECT ENG J. CARLSON /S/	10/30/87
CHECKED BY JACK CROCKER /S/	10/28/87
DRAWN BY M. KING /S/	10/27/87

TITLE
NOAA SHIP RAINIER ONLY
DOCKING PLAN

DWG NO. RA–S0701–2–2
REV. E
SIZE H
SCALE AS NOTED
SHT. 1 OF 1